ENGINEERING
TOMORROW

Data Sheet

Temperature sensor Type **MBT 3250**

Heavy-duty industrial temperature sensor.

Heavy-duty temperature sensors for controlling cooling water, lubrication oil, hydraulic oil and refrigeration plants within general industry and marine applications.

On a standardized Pt 100 or Pt 1000 element, which gives a reliable and accurate measurement. The sensor can also be delivered with NTC / PTC elements on request.

The MBT 3250 with changeable measuring insert is equipped with EN 175302-803-A Pg plug as standard.

The measuring insert is based on a silicone cable, which makes the sensor very resistant towards vibrations.

Features:

- Gaseous or liquid media, e.g. air, gas, vapour, water or oil
- Up to 200 °C media temperature
- Pt 100 or Pt 1000 sensing element
- 1 or 2 elements
- Can be used with 2 or 3 wire connections
- Gold plated male and female connector
- With interchangeable measuring insert

Product specification

Technical data

Table 1: General data

Features	Description	
Measuring range	-50 – 200 °C	
Sensing element	1 or 2 x Pt 100, 1 or 2 x Pt 1000	
Protection tube	ø8 × 1 mm	
Permissible media velocity	Air	25 m/s
	Water	3 m/s

Table 2: Connection

Process connection	G ¼	G ¼ A G ⅜ A – M18	G ¾ A M24
Max. tightening torque	25 Nm	50 Nm	100 Nm

Table 3: Response time

Type	Protection tube	Indicative response times			
		Water 0.2 m/s		Air 1 m/s	
		$t_{0.5}$	$t_{0.9}$	$t_{0.5}$	$t_{0.9}$
MBT 3250 with interchangeable measuring insert	ø8 × 1 mm	9 s	33 s	95 s	310 s

Table 4: Mechanical and environmental specifications

Features	Description	
Sensor tolerance	EN 60751 Class B: ± (0.3 + 0.005 × t)	t = temperature of medium, numerical value
Vibration stability	Shock:	100 g / 6 ms
	Vibrations:	4 g sine function 5 – 200 Hz, measured acc. to IEC 60068-2-6
Enclosure	IP65 according to IEC 60529	
Cable entry EN 175301-803	Pg 9, Pg 11 or Pg 13.5	

Table 5: Materials

Features	Description
Protection tube in contact with media	W.no. 1.4571 (AISI 316 Ti)
Process connection	W.no. 1.4404 (AISI 316 L)
Extension length	W.no. 1.4571 (AISI 316 Ti)
Union	Nickel plated brass
Gasket	Silicone
Plug En 175301-803	PA 6.6 (max 125 °C)

Table 6: Max. temperature and load

Max. temperature (Ext. length "None") Plug EN 175301-803	Max. load on protection tube (ø8 × 1, ø10 × 2) acc. to EN 175301-803
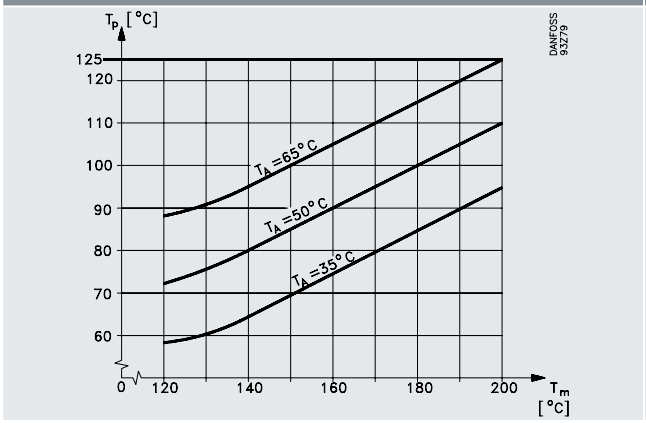	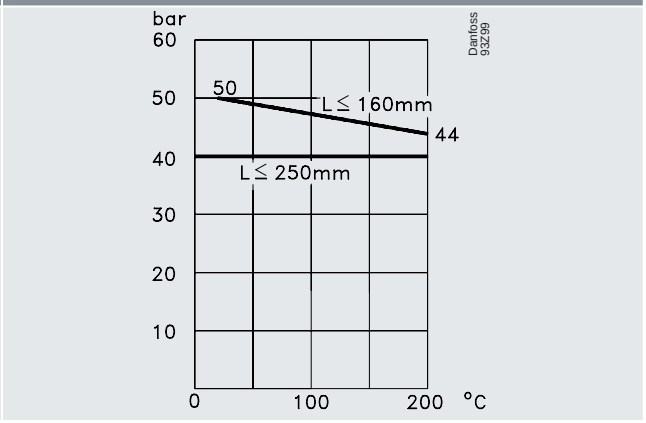

L	Insertion length	T_p	Temperature for electric plug
T_m	Media temperature	T_A	Ambient temperature

NOTE:
For extension length = 50 mm no limitations up to 200 °C media temperature and 90 °C ambient temperature.

Dimensions

Table 7: Extension length

Without extension length	With extension length
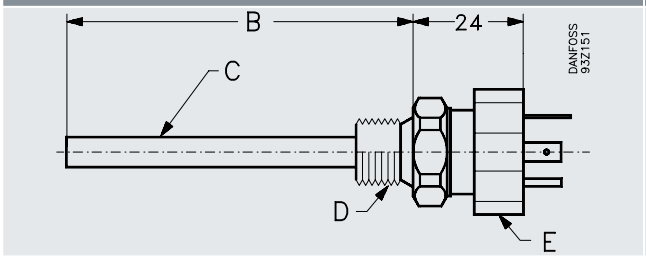	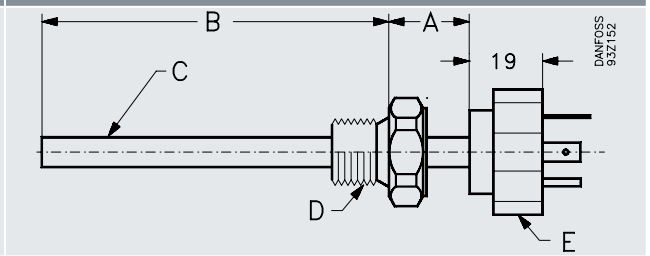

A	Extension length	D	Process connection
B	Insertion length	E	Union
C	Protection tube		

NOTE:
- Tightening torque for the mounting screw at the rear end of the electrical connection plug: 25 Ncm
- Tightening torque for the union (position "E"): 17 Nm

Table 8: Gasket and Plugs

Gasket	Plugs	
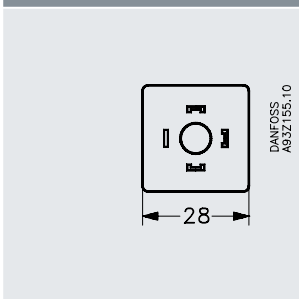	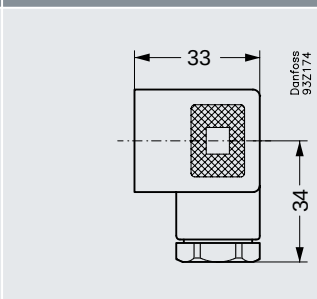	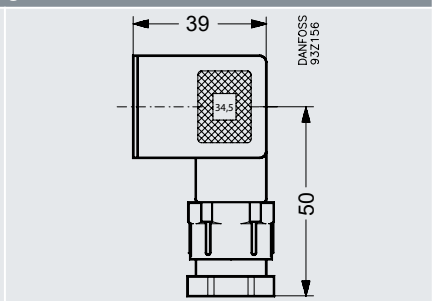

Units: mm

Table 9: Connection

Process connection	G ¼	G ¼ A – G ½ A G ⅜ A – M18	G ¾ A M24
Width across flats	HEX 22	HEX 27	HEX 32

Electrical connection

Figure 1: Electrical connection

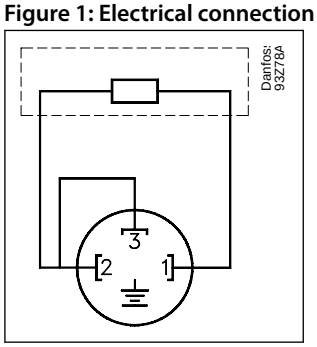

2-wire, 3 terminals
(Ground not connected)

Ordering

Figure 2: Ordering for MBT 3250

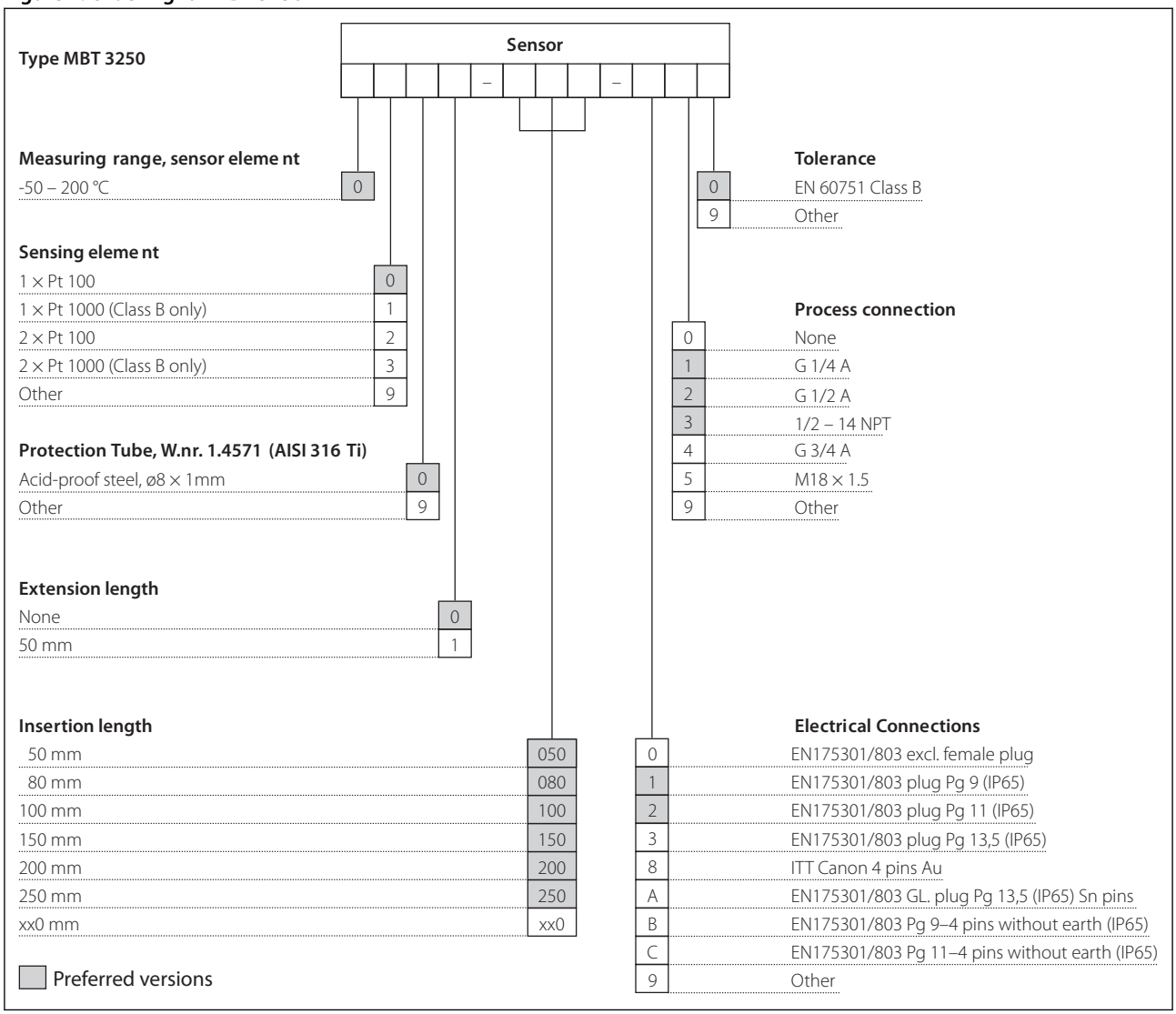

Certificates, declarations, and approvals

The list contains all certificates, declarations, and approvals for this product type. Individual code number may have some or all of these approvals, and certain local approvals may not appear on the list.

Some approvals may change over time. You can check the most current status at danfoss.com or contact your local Danfoss representative if you have any questions.

Table 10: Certificates, declarations, and approvals

File name	Document type	Document topic	Approval authority
084R1022.01	Manufacturers Declaration	China RoHS	Danfoss
097R0004.01	Manufacturers Declaration	RoHS	Danfoss
087R0017.00	Manufacturers Declaration	Simple apparatus	Danfoss
OC.C.32.004.A 75977	Measuring - Performance Certificate	–	GOST

ENGINEERING
TOMORROW

Online support

Danfoss offers a wide range of support along with our products, including digital product information, software, mobile apps, and expert guidance. See the possibilities below.

The Danfoss Product Store

The Danfoss Product Store is your one-stop shop for everything product related—no matter where you are in the world or what area of the cooling industry you work in. Get quick access to essential information like product specs, code numbers, technical documentation, certifications, accessories, and more.
Start browsing at store.danfoss.com.

Find technical documentation

Find the technical documentation you need to get your project up and running. Get direct access to our official collection of data sheets, certificates and declarations, manuals and guides, 3D models and drawings, case stories, brochures, and much more.

Start searching now at www.danfoss.com/en/service-and-support/documentation.

Danfoss Learning

Danfoss Learning is a free online learning platform. It features courses and materials specifically designed to help engineers, installers, service technicians, and wholesalers better understand the products, applications, industry topics, and trends that will help you do your job better.

Create your Danfoss Learning account for free at www.danfoss.com/en/service-and-support/learning.

Get local information and support

Local Danfoss websites are the main sources for help and information about our company and products. Find product availability, get the latest regional news, or connect with a nearby expert—all in your own language.

Find your local Danfoss website here: www.danfoss.com/en/choose-region.

Danfoss can accept no responsibility for possible errors in catalogues, brochures and other printed material. Danfoss reserves the right to alter its products without notice. This also applies to products already on order provided that such alterations can be made without subsequential changes being necessary in specifications already agreed. All trademarks in this material are property of the respective companies. Danfoss and the Danfoss logotype are trademarks of Danfoss A/S. All rights reserved.